18 Gauge 430 Stainless Steel Folding Tables with Undershelf

ITEM: **41234** **41235** **41236** **41237**

A stainless steel folding table with an undershelf for extra storage.

These folding tables have an 18 gauge 430 stainless steel top and an undershelf on folding legs. They set up quickly for catering, events and extra prep space, then fold away for storage. Available in 24″ and 30″ depths, 60″ and 72″ wide.

- **18 gauge 430 stainless steel top**
- **Undershelf for storage**
- **Folding legs**
- **30.63″ working height**
- **NSF certified**



41234 24″ x 60″



41236 30″ x 60″



41237 30″ x 72″

AT A GLANCE

Material	18 gauge 430 stainless steel
Available Sizes (D x W)	24″ deep: 60″, 72″ wide 30″ deep: 60″, 72″ wide
Height	30.63″ (778 mm)
Certification	NSF
Warranty	180 Days Limited

Telephone: 1-800-465-0234 Fax: (905) 607-0234 Email: sales@omcan.com Website: www.omcan.com

AUTHORIZED DEALER

NSF Certified

180 Days Limited Warranty

MODELS AND CAPACITIES

Item	Size (D x W)	Load Capacity	Net Weight
24″ DEPTH			
41234	24″ x 60″ (610 x 1524 mm)	616 lb (279.4 kg)	70.4 lb (31.9 kg)
41235	24″ x 72″ (610 x 1829 mm)	649 lb (294.4 kg)	84.7 lb (38.4 kg)
30″ DEPTH			
41236	30″ x 60″ (762 x 1524 mm)	682 lb (309.4 kg)	88 lb (39.9 kg)
41237	30″ x 72″ (762 x 1829 mm)	616 lb (279.4 kg)	105 lb (47.6 kg)

41234 | 24″ X 60″ 18 GAUGE 430 STAINLESS STEEL FOLDING TABLE WITH UNDERSHELF

ITEM	SIZE (D X W)	HEIGHT	LOAD CAPACITY	NET WEIGHT
41234	24″ x 60″ (610 x 1524 mm)	30.63″ (778 mm)	616 lb (279.4 kg)	70.4 lb (31.9 kg)

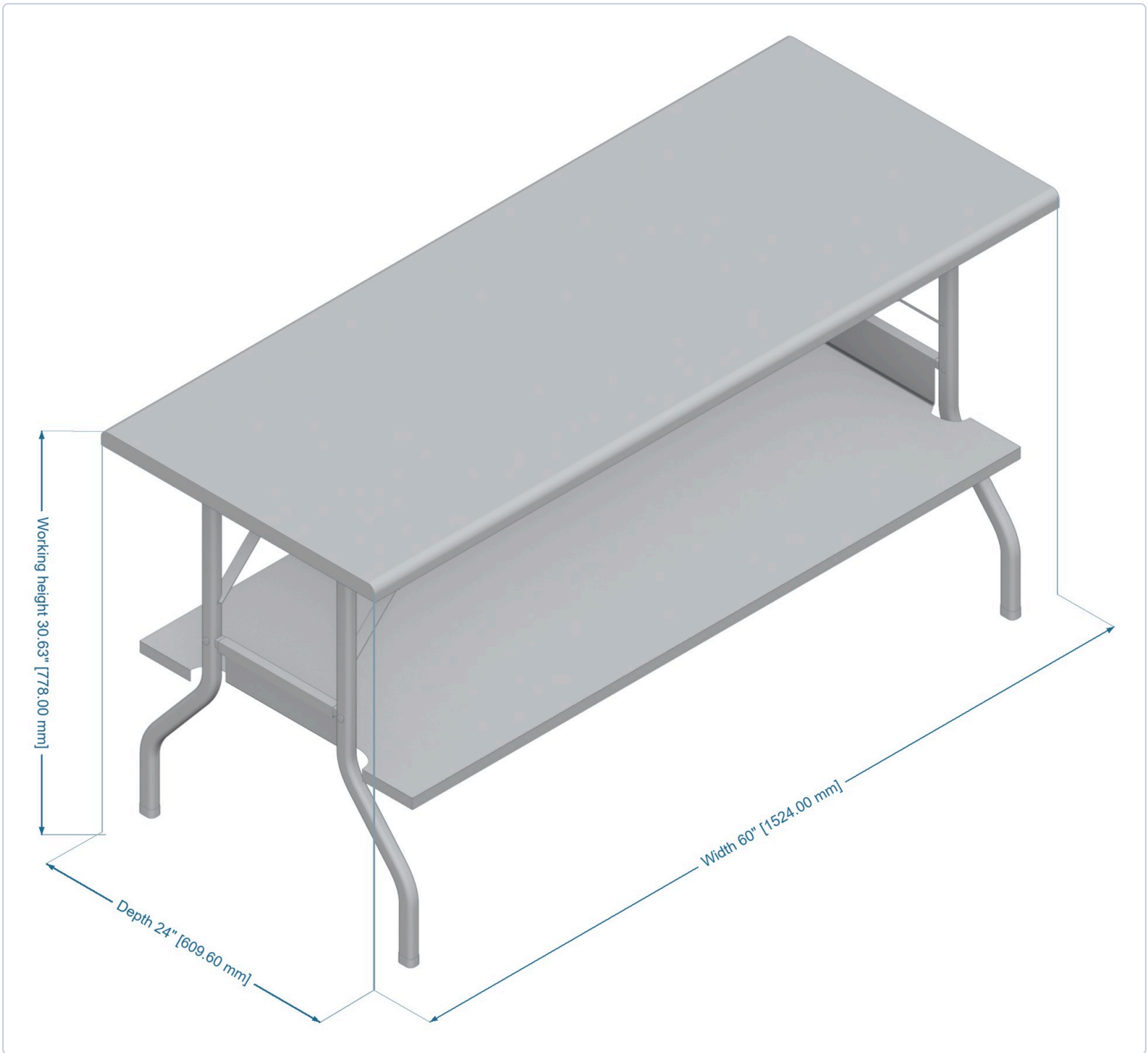

Dimensions in inches (millimetres). Use the printed dimensions, not measurements taken from the drawing. Unlabelled hardware, shelf and brace settings, and finish are illustrative.

41235 | 24″ X 72″ 18 GAUGE 430 STAINLESS STEEL FOLDING TABLE WITH UNDERSHELF

ITEM	SIZE (D X W)	HEIGHT	LOAD CAPACITY	NET WEIGHT
41235	24″ x 72″ (610 x 1829 mm)	30.63″ (778 mm)	649 lb (294.4 kg)	84.7 lb (38.4 kg)

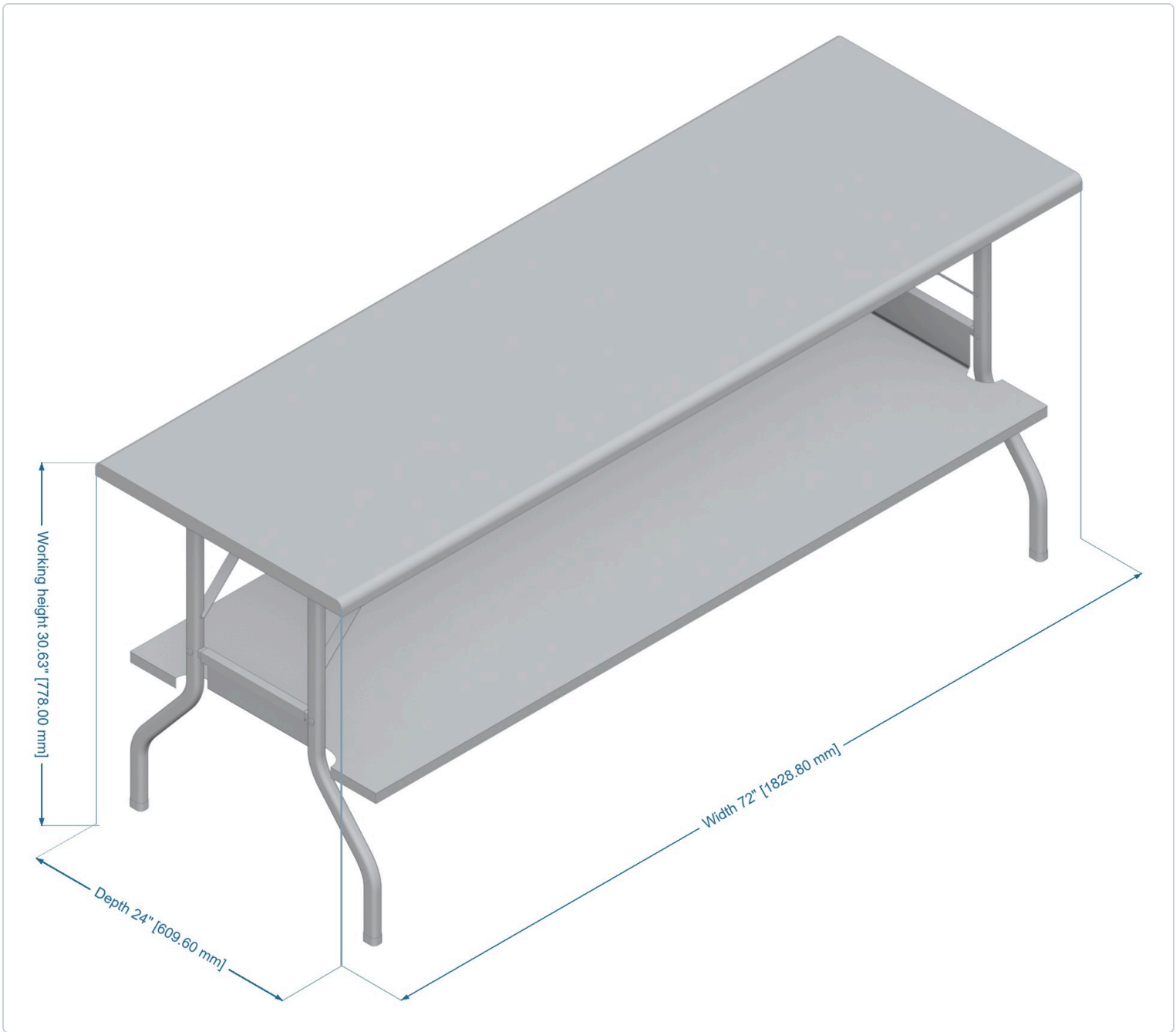

Dimensions in inches (millimetres). Use the printed dimensions, not measurements taken from the drawing. Unlabelled hardware, shelf and brace settings, and finish are illustrative.

41236 | 30″ X 60″ 18 GAUGE 430 STAINLESS STEEL FOLDING TABLE WITH UNDERSHELF

ITEM	SIZE (D X W)	HEIGHT	LOAD CAPACITY	NET WEIGHT
41236	30″ x 60″ (762 x 1524 mm)	30.63″ (778 mm)	682 lb (309.4 kg)	88 lb (39.9 kg)

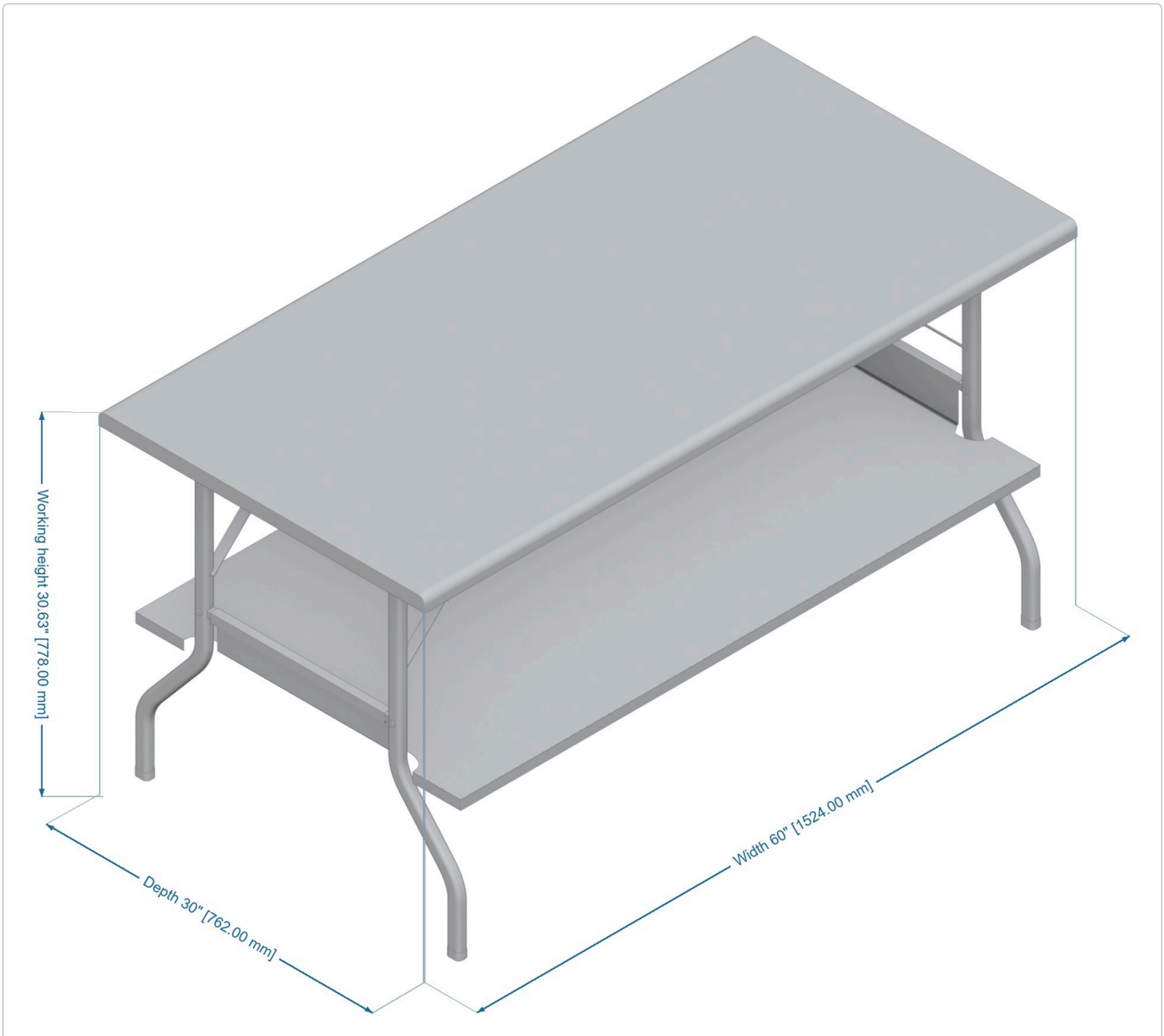

Dimensions in inches (millimetres). Use the printed dimensions, not measurements taken from the drawing. Unlabelled hardware, shelf and brace settings, and finish are illustrative.

41237 | 30″ X 72″ 18 GAUGE 430 STAINLESS STEEL FOLDING TABLE WITH UNDERSHELF

ITEM	SIZE (D X W)	HEIGHT	LOAD CAPACITY	NET WEIGHT
41237	30″ x 72″ (762 x 1829 mm)	30.63″ (778 mm)	616 lb (279.4 kg)	105 lb (47.6 kg)

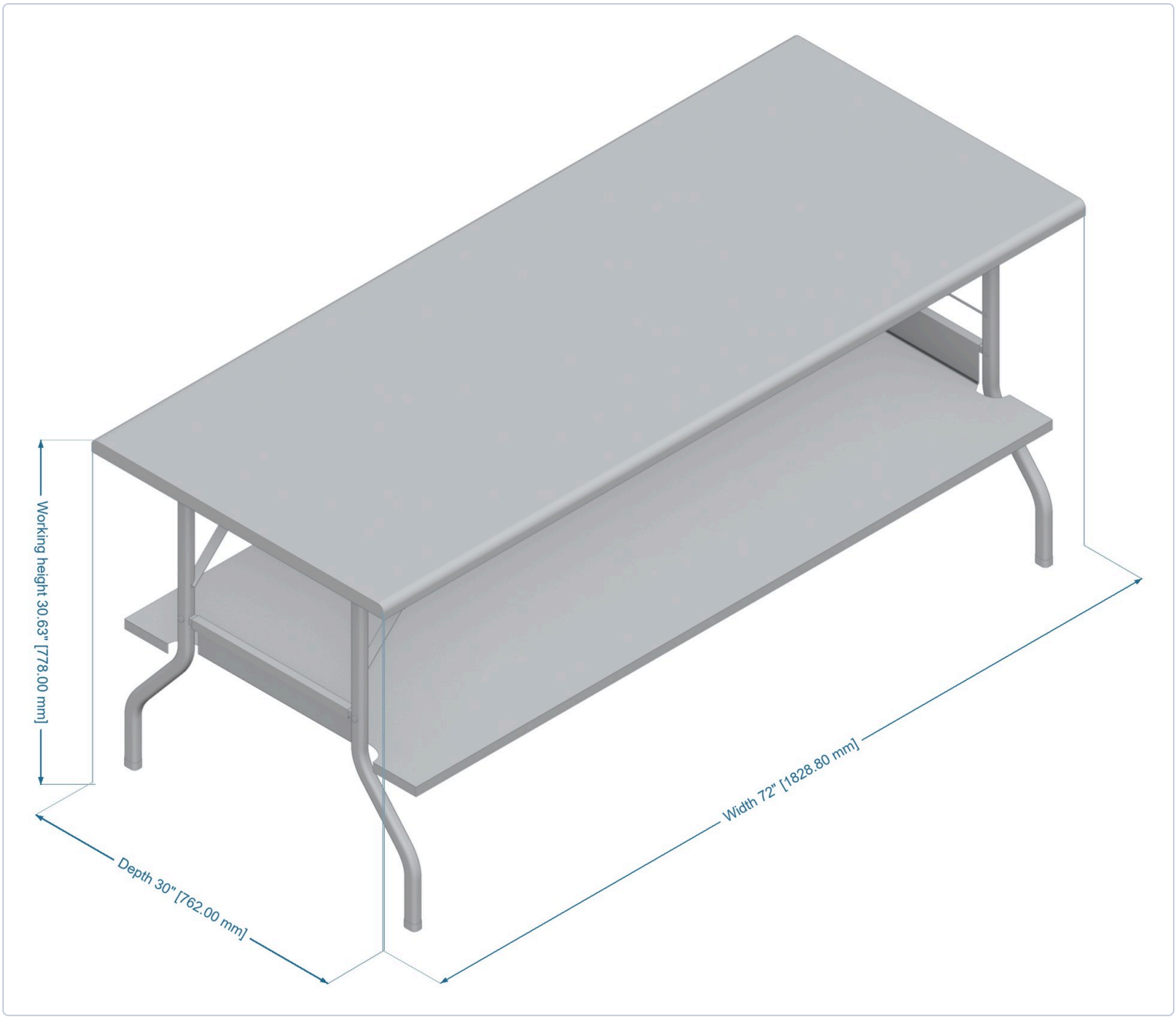

Dimensions in inches (millimetres). Use the printed dimensions, not measurements taken from the drawing. Unlabelled hardware, shelf and brace settings, and finish are illustrative.